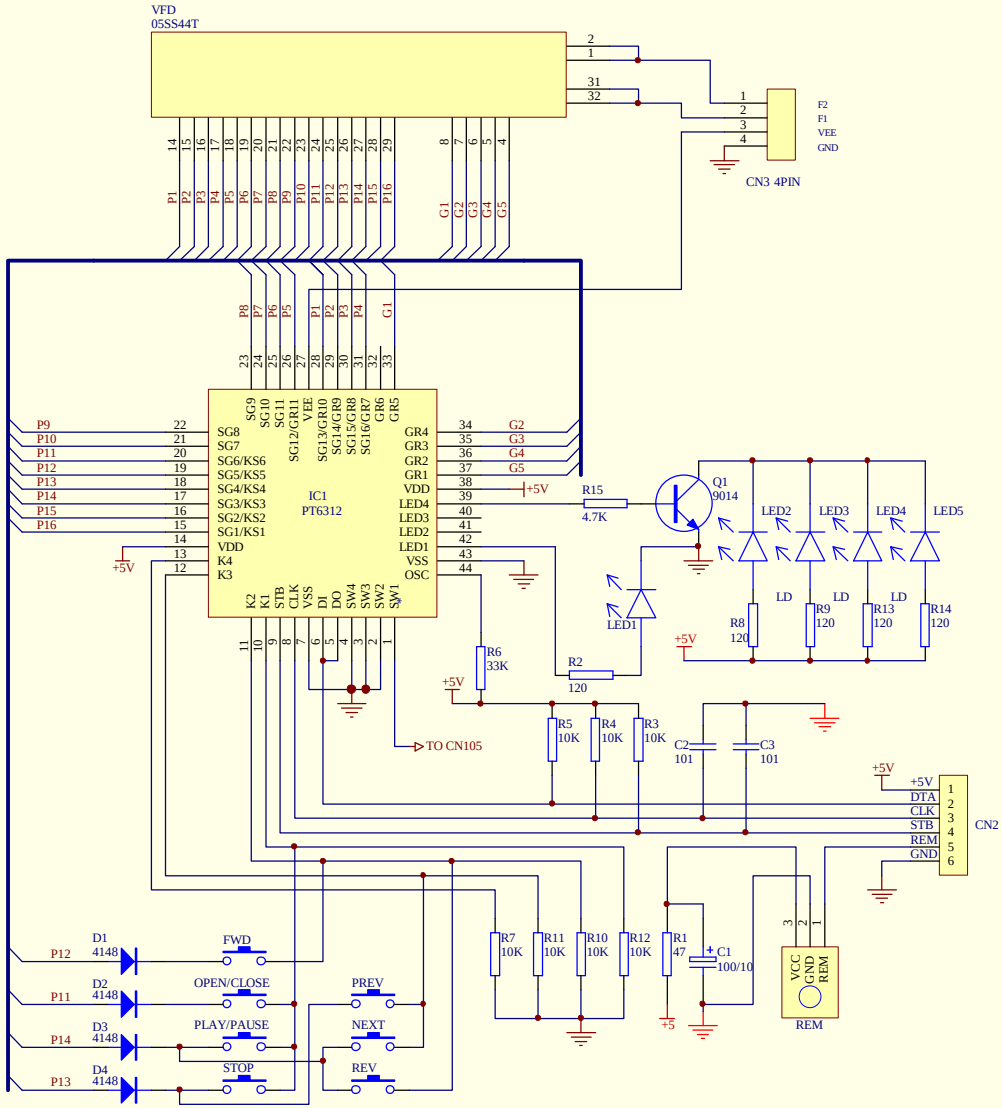

Title		
Size B	Number	Revision
Date: 6-Feb-2004		Sheet of
File: E:\F\jin xiang\K9a-ca.DDB		Drawn By:

PDF created with pdfFactory trial version www.pdffactory.com